# Equ. of lines & planes

Tomorrow $\longrightarrow$ quiz 10.3 and 10.4
dot product
10 min. long.

---

## Review of Cross product

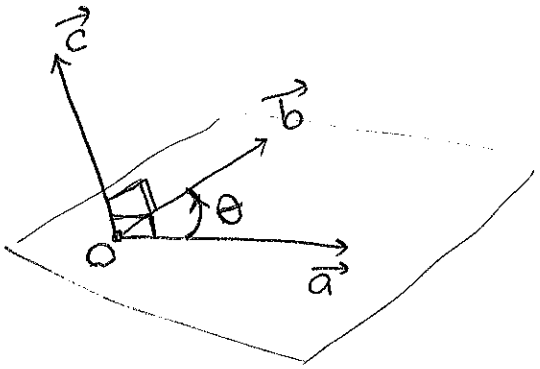


$\vec{a} = (x_1, y_1, z_1)$
$\vec{b} = (x_2, y_2, z_2)$

$\vec{c} = \vec{a} \times \vec{b}$

- $\vec{c} = \begin{bmatrix} \vec{i} & \vec{j} & \vec{k} \\ \text{---} & \vec{a} & \text{---} \\ \text{---} & \vec{b} & \text{---} \end{bmatrix} = \begin{bmatrix} i & j & k \\ x_1 & y_1 & z_1 \\ x_2 & y_2 & z_2 \end{bmatrix}$

$= \quad \vec{i} + \quad \vec{j} + \quad \vec{k}$

(Formula for coor of $\vec{c} = \vec{a} \times \vec{b}$)

- $\vec{c}$ orthogonal (perp.) to plane of $\vec{a}$ & $\vec{b}$.

(if $\vec{a}$ & $\vec{b}$ are in the same direction, then $\vec{a} \times \vec{b} = 0$)

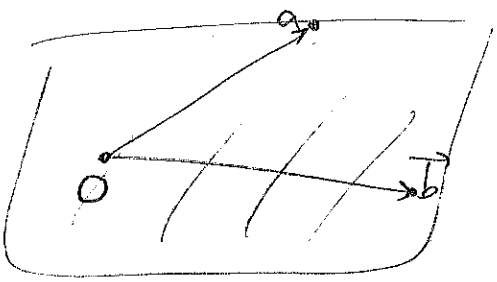


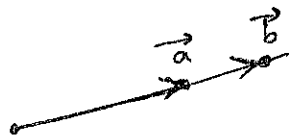


- orth. to $\vec{a}$ and $\vec{b}$
- $|\vec{c}| = |\vec{a}||\vec{b}| \sin(\theta)$

angle from $\vec{a}$ to $\vec{b}$

~~$\cos(\theta) = \cos(-\theta)$~~

- 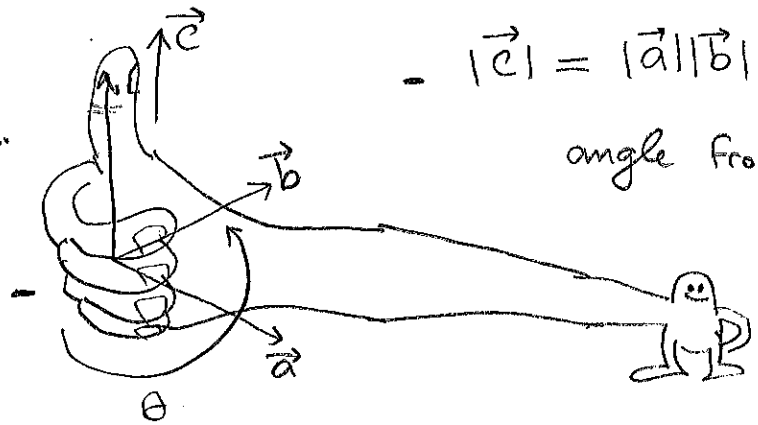

( ≠ Turk) ☺

<u>Torque</u> $\longrightarrow$ $\vec{\tau} = \vec{r} \times \vec{F}$

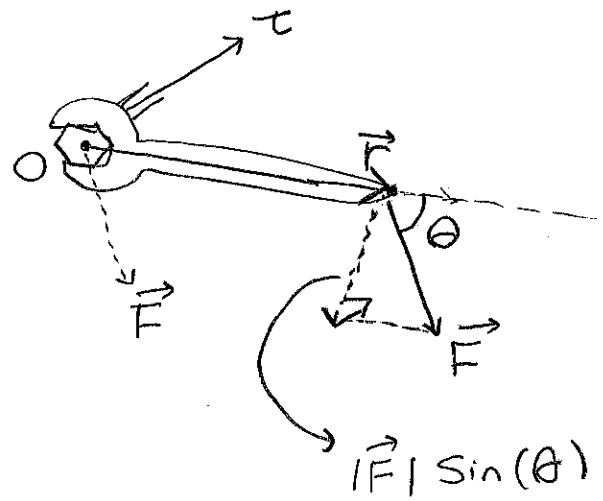


$$\vec{\tau} = \vec{r} \times \vec{F}$$

---

<u>10.5</u>

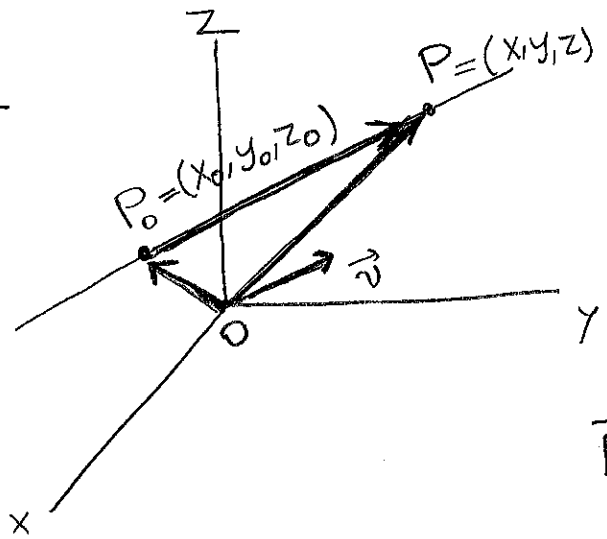


equ. for lines and planes.

$$\overrightarrow{P_0P} = \vec{P} - \vec{P_0}$$

parallel to $\vec{v}$ $= t\vec{v}$

$$\vec{P} = t\vec{v} + \vec{P_0}$$

Calculus : approximating more complicated objects/functions by <u>linear</u> things ( lines, planes, etc. )

Info. about a line given :

- direction vector $\vec{v}$.
- One point $P_0$ on the line.

(Parametric)

Ex. Equ. of a line:

- $P_0 = (1, 2, 3)$

- $\vec{v} = (1, 7, 2)$

$$P = t(1,7,2) + (1,2,3) = (t+1, 7t+2, 2t+3)$$

general point on the line

$$\begin{cases} x = t+1 \\ y = 7t+2 \\ z = 2t+3 \end{cases}$$

parametric equ. of the line

$t \rightsquigarrow$ time.

$$t = 0 \longrightarrow P = P_0 = (1, 2, 3)$$

---

Another para.

Another point of the same line: $(2, 9, 5)$

$$t\left(\tfrac{1}{2}, \tfrac{7}{2}, 1\right) + (2, 9, 5)$$

$\vec{v} = (a, b, c)$ $P_0 = (x_0, y_0, z_0)$

$$\frac{x - x_0}{a} = \frac{y - y_0}{b} = \frac{z - z_0}{c}$$

$$\left.\begin{aligned} t &= x - 1 \\ t &= \frac{y-2}{7} \\ t &= \frac{z-3}{2} \end{aligned}\right\} \quad \boxed{\frac{x-1}{1} = \frac{y-2}{7} = \frac{z-3}{2}}$$

Symmetric equations for the line. (in fact 2 equ.).

---

- Ex. $\dfrac{x-3}{5} = \dfrac{y+3}{1} = \dfrac{z+5}{1} \longrightarrow$ equ. of a line

$\vec{v} = (5, 1, 1)$ $P_0 = (3, -3, -5)$

$$\begin{cases} x = 5t + 3 \\ y = t - 3 \\ z = t - 5 \end{cases}$$

$$y + 3 = y - \underline{\underline{y_0}}$$

$$y - (-3)$$

- Write down equ. (symm. or para.) for a line with <u>two</u> points given

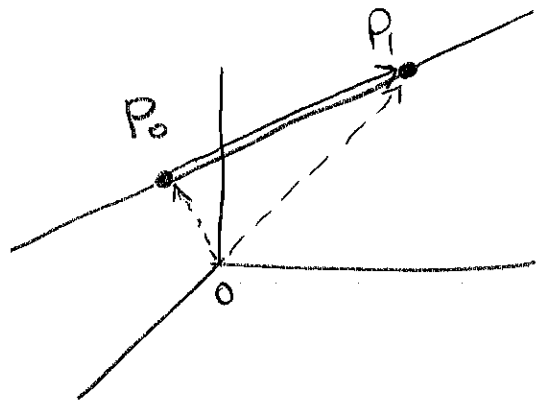


$$\vec{v} = \vec{P_1} - \vec{P_0}$$

---

## <u>Planes</u>

* A plane in 3D is given by <u>one</u> linear equ:

$$ax + by + cz + d = 0.$$

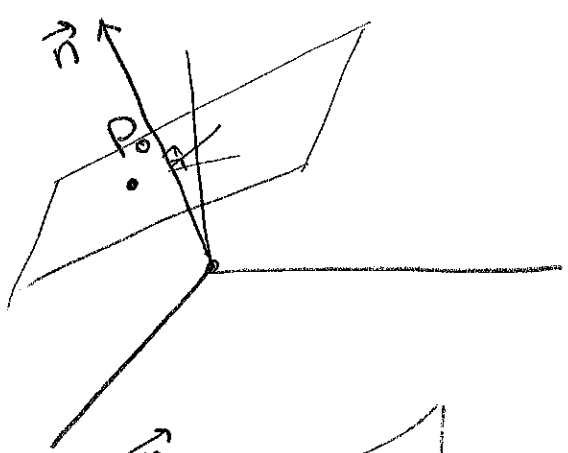


- Info. given:
  - one point $P_0$ on the plane
  - $\vec{n}$ orth. vec. (normal vector).

$$\boxed{\vec{n} \cdot (\vec{P_1} - P_0) = 0}$$

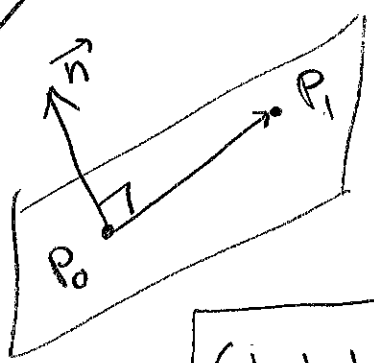


Ex. $\vec{n} = (1, 1, 1)$ $P = (x, y, z)$

$P_0 = (1, 2, 3)$

$$\boxed{(1,1,1) \cdot (x-1, y-2, z-3) = 0}$$

$$(x-1) + (y-2) + (z-3) = 0$$

$$\boxed{x + y + z - 6 = 0}$$